Product: **KLUDI OBJEKTA single lever basin mixer DN 15**

Ref.: **322330575**

Product description

single lever basin mixer DN 15
single hole mounted
solid lever
ceramic cartridge with hot water safety device
aerator M 24 x 1
flow rate 8,2 l/min at 3 bar
flexible high pressure supply tubes G 3/8
rapid installation set
pop up waste 1 1/4 inch
noise group I, P-IX 28192/IZ

Finishes:
05 chrome

Product picture

Advertisement

single lever basin mixer, manufacturer KLUDI GmbH & Co. KG
KLUDI OBJEKTA item no. 322330575
type: single lever basin mixer, DN 15 / PN 10, chrome plated brass, with pop up waste 1 1/4 inch rod-pull and pull knob chrome plated, solid lever chrome plated metal, ceramic cartridge K-35 with hot water safety device, aerator M 24 x 1, flow rate 8,2 l/min at 3 bar, flexible high pressure supply tubes 3/8 inch with DVGW / W270 approval, rapid installation set
noise level DIN 4109 noise group I, report no. P-IX 28192/IZ
dimensions: height: 140 mm, nozzle height: 80 mm, projection: 105 mm, lever projection: 80 mm

Dimensional drawing

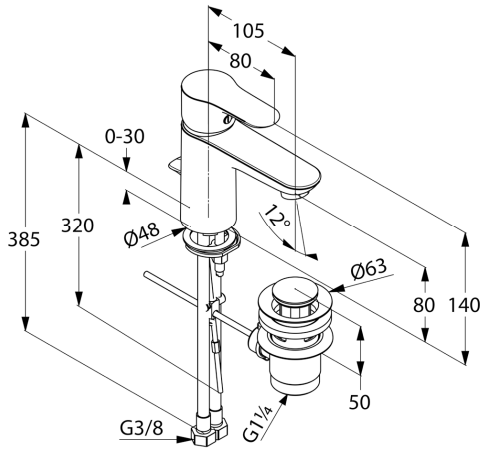
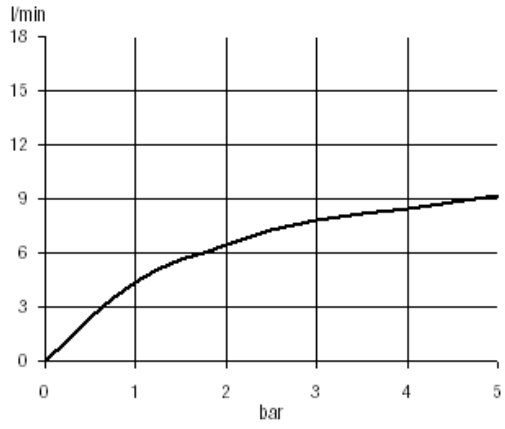
Flow rate diagram